Kafrelshiekh University
Faculty of Engineering
Work Term Exam
First Year
Mechanical Engg. Dept., تخلف

Date: May., 2021
Machines Drawing
Time allowed: Three hours
Full Mark: 175 marks

Part A: Answer the two of the following question:

1. **Sketch (*a*) sectional view from the front and (*b*) view from the side of a spur gear with a web.**

2. **Draw (a) sectional view from the front and (b) view from the side of a hydraulic pipe joint of Socket and Spigot type, to connect two pipes, each of diameter 50 mm.**

Part B: Assembly drawing:

Figure shows the details of a V-belt drive. Assemble the parts and draw the following views, to a suitable scale: (*i*) Sectional view from the front and (*ii*) View from the right (not showing the V-pulley).

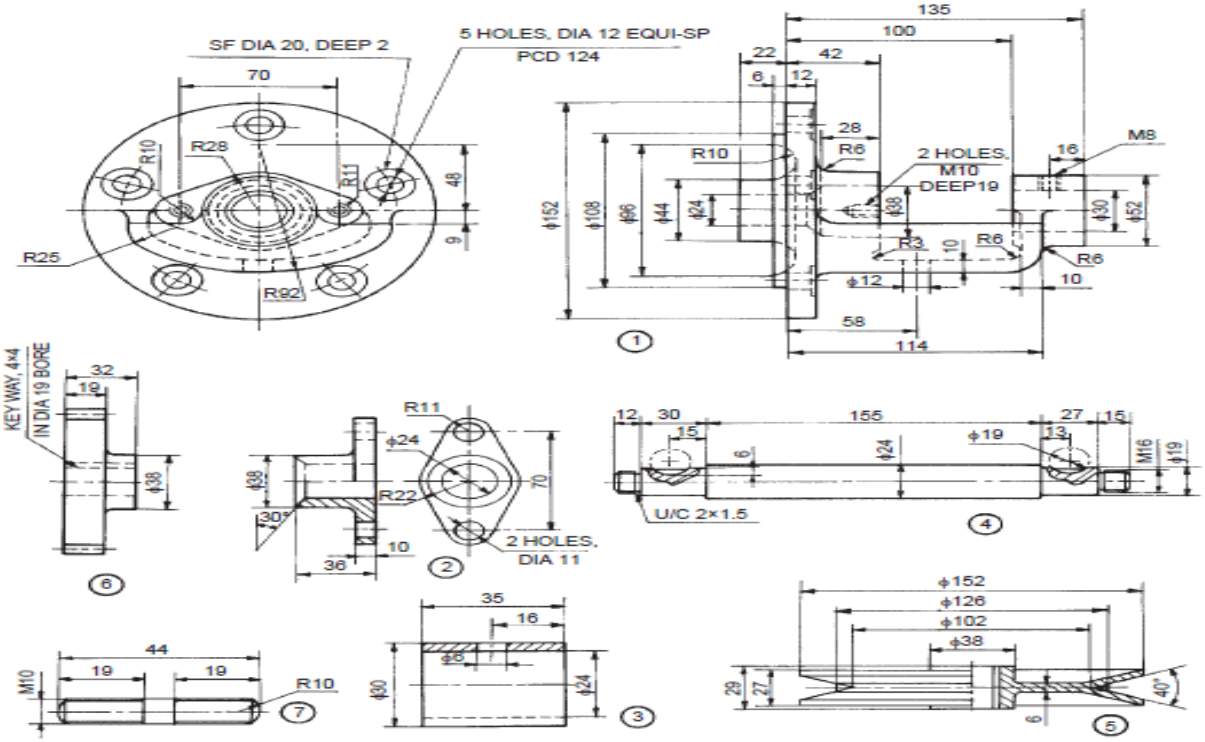

Parts list

Part No.	Name	Matl	Qty
1	Bracket	CI	1
2	Gland	CI	1
3	Bush	GM	1
4	Shaft	MCS	1
5	V-Pulley	CI	1
6	Gear wheel	MCS	1
7	Stud	MS	2